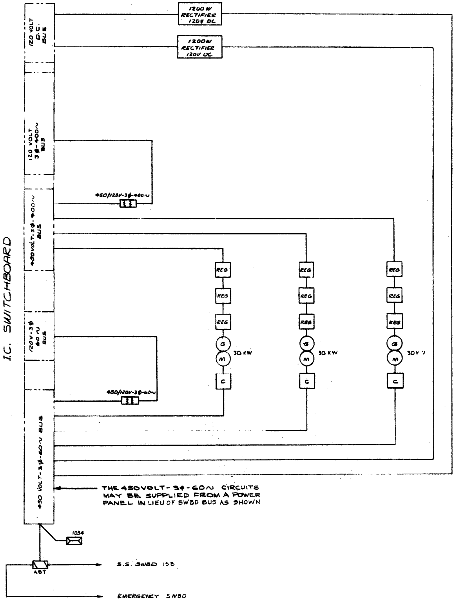
I.C. SWITCHBOARD
120 VOLT D.C. BUS
120 VOLT 3Φ-400~ BUS
450VOLT-3Φ-400~ BUS
120V-3Φ 60~ BUS
450 VOLT-3Φ-60~ BUS
1200W RECTIFIER 120V DC
1200W RECTIFIER 120V DC
450/120V-3Φ-400~
450/120V-3Φ-60~
REG
REG
REG
G
M
C
30 KW
30 KW
30 KW
THE 450VOLT-3Φ-60~ CIRCUITS MAY BE SUPPLIED FROM A POWER PANEL IN LIEU OF SWBD BUS AS SHOWN
1034
ABT
S.S. SWBD 1SB
EMERGENCY SWBD

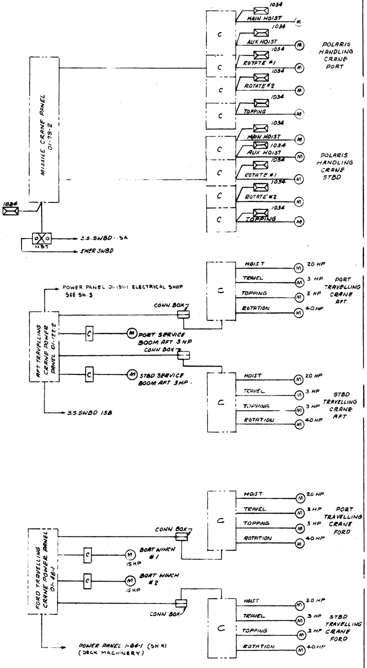
MISSILE CRANE PANEL 01-79-2
1034
ABT
S.S. SWBD 1SA
EMER SWBD
C
MAIN HOIST
AUX HOIST
ROTATE #1
ROTATE #2
TOPPING
M
POLARIS HANDLING CRANE PORT
POLARIS HANDLING CRANE STBD
POWER PANEL 01-131-1 ELECTRICAL SHOP SEE SH. 3
AFT TRAVELLING CRANE POWER PANEL 01-122-2
CONN. BOX
PORT SERVICE BOOM AFT 3 HP
STBD SERVICE BOOM AFT 3 HP
S.S. SWBD 1SB
HOIST
TRAVEL
TOPPING
ROTATION
20 HP
3 HP
3 HP
40 HP
PORT TRAVELLING CRANE AFT
STBD TRAVELLING CRANE AFT
FORD TRAVELLING CRANE POWER PANEL 01-48-1
BOAT WINCH #1
15 HP
BOAT WINCH #2
15 HP
PORT TRAVELLING CRANE FORD
STBD TRAVELLING CRANE FORD
POWER PANEL 1-64-1 (SH 4) (DECK MACHINERY)

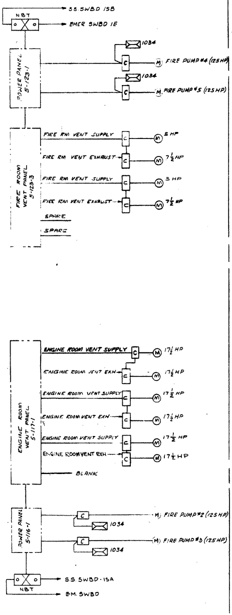
S.S. SWBD 15B
NBT
EMER SWBD 1E
POWER PANEL 5-123-1
1034
FIRE PUMP #4 (125HP)
1034
FIRE PUMP #5 (125 HP)
FIRE ROOM VENT PANEL 5-123-3
FIRE RM VENT SUPPLY
5 HP
FIRE RM VENT EXHAUST
7½ HP
FIRE RM VENT SUPPLY
3 HP
FIRE RM VENT EXHAUST
7½ HP
SPARE
SPARE
ENGINE ROOM VENT PANEL 5-117-1
ENGINE ROOM VENT SUPPLY
17½ HP
ENGINE ROOM VENT EXH
17½ HP
ENGINE ROOM VENT SUPPLY
17½ HP
ENGINE ROOM VENT EXH
17½ HP
ENGINE ROOM VENT SUPPLY
17½ HP
ENGINE ROOM VENT EXH
17½ HP
BLANK
POWER PANEL 5-116-1
FIRE PUMP #2 (125 HP)
1034
FIRE PUMP #3 (125 HP)
1034
S.S. SWBD-15A
NBT
EM. SWBD

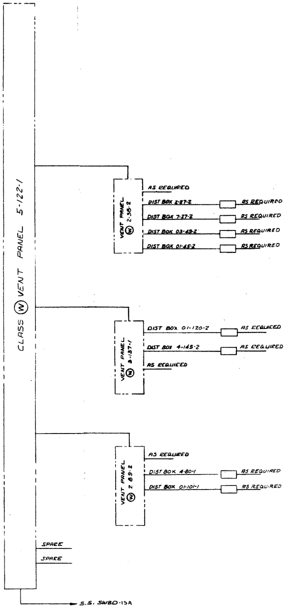
CLASS W VENT PANEL 5-122-1
VENT PANEL W 2-35-2
AS REQUIRED
DIST BOX 2-27-2
AS REQUIRED
DIST BOX 7-27-2
AS REQUIRED
DIST BOX 03-45-2
AS REQUIRED
DIST BOX 01-45-2
AS REQUIRED
VENT PANEL W 3-137-1
DIST BOX 01-120-2
AS REQUIRED
DIST BOX 4-145-2
AS REQUIRED
AS REQUIRED
VENT PANEL W 2-89-2
AS REQUIRED
DIST BOX 4-80-1
AS REQUIRED
DIST BOX 01-101-1
AS REQUIRED
SPARE
SPARE
S.S. SWBD-15A

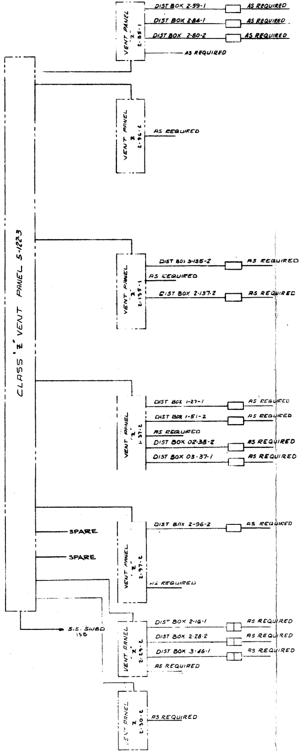
CLASS "Z" VENT PANEL 5-122-3
VENT PANEL "Z" 2-85-1
DIST BOX 2-59-1
AS REQUIRED
DIST BOX 2-84-1
AS REQUIRED
DIST BOX 2-80-2
AS REQUIRED
AS REQUIRED
VENT PANEL Z 2-96-2
AS REQUIRED
VENT PANEL "Z" 2-135-1
DIST BOX 3-135-2
AS REQUIRED
AS REQUIRED
DIST BOX 2-137-2
AS REQUIRED
VENT PANEL "Z" 1-57-2
DIST BOX 1-27-1
AS REQUIRED
DIST BOX 1-51-2
AS REQUIRED
AS REQUIRED
DIST BOX 02-38-2
AS REQUIRED
DIST BOX 03-37-1
AS REQUIRED
SPARE
SPARE
VENT PANEL "Z" 2-97-2
DIST BOX 2-96-2
AS REQUIRED
AS REQUIRED
S.S. SWBD 15B
VENT PANEL "Z" 2-29-2
DIST BOX 2-16-1
AS REQUIRED
DIST BOX 2-28-2
AS REQUIRED
DIST BOX 3-46-1
AS REQUIRED
AS REQUIRED
VENT PANEL Z 2-30-2
AS REQUIRED

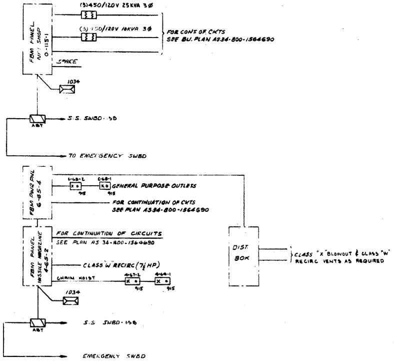
FBM PANEL
NO 1 SHOP
0-115-1
(3)450/120V 25KVA 3Ø
(3) 450/120V 10KVA 3Ø
FOR CONT. OF CKTS
SEE BU. PLAN AS34-800-1564690
SPARE
1034
ABT
S.S. SWBD-15B
TO EMERGENCY SWBD
FBM PWR PNL
6-65-4
2-68-2
2-68-1
915
915
GENERAL PURPOSE OUTLETS
FOR CONTINUATION OF CKTS
SEE PLAN AS34-800-1564690
FBM PANEL
MISSILE MAGAZINE
4-65-2
FOR CONTINUATION OF CIRCUITS
SEE PLAN AS 34-800-1564690
CLASS "W" RECIRC (7½ HP)
CHAIN HOIST
4-67-2
4-64-1
915
915
DIST.
BOX
CLASS "X" BLOWOUT & CLASS "W"
RECIRC VENTS AS REQUIRED
1034
ABT
S.S SWBD-15B
EMERGENCY SWBD

MISSILE PANELS

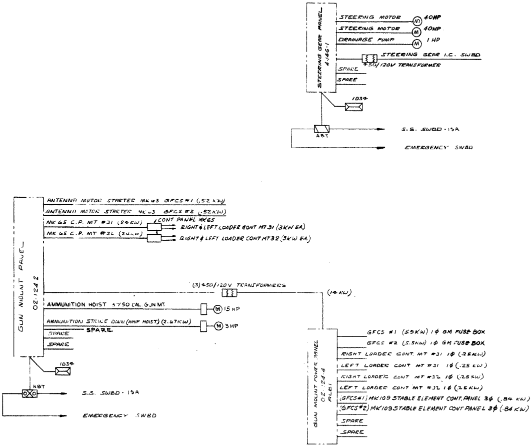
STEERING GEAR PANEL
4-146-1
STEERING MOTOR
40HP
STEERING MOTOR
40HP
DRAINAGE PUMP
1 HP
STEERING GEAR I.C. SWBD
450/120V TRANSFORMER
SPARE
SPARE
1034
ABT
S.S. SWBD-15A
EMERGENCY SWBD
GUN MOUNT PANEL
02-124-2
ANTENNA MOTOR STARTER MK 63 GFCS #1 (.52 KW)
ANTENNA MOTOR STARTER MK 63 GFCS #2 (.52 KW)
MK 65 C.P. MT #31 (24KW)
MK 65 C.P. MT #32 (24KW)
CONT PANEL MK65
RIGHT & LEFT LOADER CONT MT 31 (3KW EA.)
RIGHT & LEFT LOADER CONT MT 32 (3KW EA.)
(3) 450/120V TRANSFORMERS
(14 KW)
AMMUNITION HOIST 3"/50 CAL. GUN MT
15 HP
AMMUNITION STRIKE DOWN (WHIP HOIST) (2.67KW)
3 HP
SPARE
SPARE
SPARE
1034
NBT
S.S. SWBD-15A
EMERGENCY SWBD
GUN MOUNT POWER PANEL
02-124-4
ALB1
GFCS #1 (5.5KW) 1Ø GM FUSE BOX
GFCS #2 (5.5KW) 1Ø GM FUSE BOX
RIGHT LOADER CONT. MT #31 1Ø (.25KW)
LEFT LOADER CONT. MT #31 1Ø (.25 KW)
RIGHT LOADER CONT MT #32 1Ø (.25KW)
LEFT LOADER CONT MT #32 1Ø (.25KW)
(GFCS#1) MK109 STABLE ELEMENT CONT. PANEL 3Ø (.84 KW)
(GFCS#2) MK109 STABLE ELEMENT CONT PANEL 3Ø (.84 KW)
SPARE
SPARE

STEERING GEAR & GUN MOUNTS

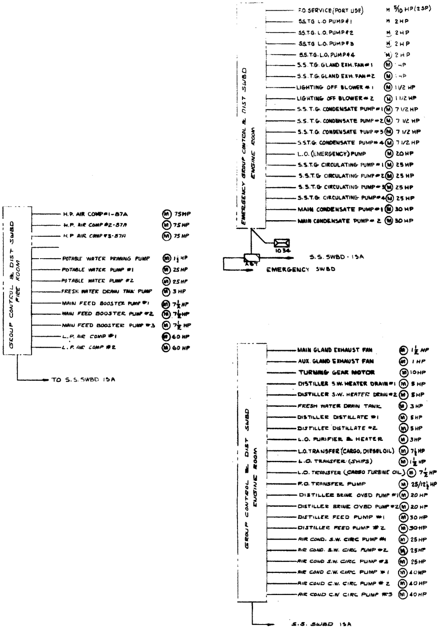
EMERGENCY GROUP CONTROL & DIST SWBD
ENGINE ROOM
F.O. SERVICE (PORT USE) M 5/10 HP (23P)
S.S.TG L.O PUMP #1 M 2 HP
S.S.T.G. L.O. PUMP #2 M 2 HP
S.S.TG L.O. PUMP #3 M 2 HP
S.S.T.G. L.O. PUMP #4 M 2 HP
S.S.T.G. GLAND EXH. FAN #1 M 1 HP
S.S.T.G. GLAND EXH. FAN #2 M 1 HP
LIGHTING OFF BLOWER #1 M 1 1/2 HP
LIGHTING OFF BLOWER #2 M 1 1/2 HP
S.S.T.G. CONDENSATE PUMP #1 M 7 1/2 HP
S.S.T.G. CONDENSATE PUMP #2 M 7 1/2 HP
S.S.T.G. CONDENSATE PUMP #3 M 7 1/2 HP
S.S.T.G. CONDENSATE PUMP #4 M 7 1/2 HP
L.O. (EMERGENCY) PUMP M 20 HP
S.S.T.G. CIRCULATING PUMP #1 M 25 HP
S.S.T.G. CIRCULATING PUMP #2 M 25 HP
S.S.T.G. CIRCULATING PUMP #3 M 25 HP
S.S.T.G. CIRCULATING PUMP #4 M 25 HP
MAIN CONDENSATE PUMP #1 M 30 HP
MAIN CONDENSATE PUMP #2 M 30 HP
1034
ABT
S.S. SWBD - 15A
EMERGENCY SWBD
GROUP CONTROL & DIST SWBD
FIRE ROOM
H.P. AIR COMP #1-87A M 75 HP
H.P. AIR COMP #2-87A M 75 HP
H.P. AIR COMP #3-87A M 75 HP
POTABLE WATER PRIMING PUMP M 1½ HP
POTABLE WATER PUMP #1 M 25 HP
POTABLE WATER PUMP #2 M 25 HP
FRESH WATER DRAIN TANK PUMP M 3 HP
MAIN FEED BOOSTER PUMP #1 M 7½ HP
MAIN FEED BOOSTER PUMP #2 M 7½ HP
MAIN FEED BOOSTER PUMP #3 M 7½ HP
L.P. AIR COMP #1 M 60 HP
L.P. AIR COMP #2 M 60 HP
TO S.S. SWBD 15A
GROUP CONTROL & DIST SWBD
ENGINE ROOM
MAIN GLAND EXHAUST FAN M 1½ HP
AUX. GLAND EXHAUST FAN M 1 HP
TURNING GEAR MOTOR M 10 HP
DISTILLER S.W. HEATER DRAIN #1 M 5 HP
DISTILLER S.W. HEATER DRAIN #2 M 5 HP
FRESH WATER DRAIN TANK M 3 HP
DISTILLER DISTILLATE #1 M 5 HP
DISTILLER DISTILLATE #2 M 5 HP
L.O. PURIFIER & HEATER M 3 HP
L.O. TRANSFER (CARGO, DIESEL OIL) M 7½ HP
L.O. TRANSFER (SHIPS) M 1½ HP
L.O. TRANSFER (CARGO TURBINE OIL) M 7½ HP
F.O. TRANSFER PUMP M 25/12½ HP
DISTILLER BRINE OVBD PUMP #1 M 20 HP
DISTILLER BRINE OVBD PUMP #2 M 20 HP
DISTILLER FEED PUMP #1 M 30 HP
DISTILLER FEED PUMP #2 M 30 HP
AIR COND. S.W. CIRC PUMP #1 M 25 HP
AIR COND. S.W. CIRC PUMP #2 M 25 HP
AIR COND S.W. CIRC PUMP #3 M 25 HP
AIR COND C.W. CIRC PUMP #1 M 40 HP
AIR COND C.W. CIRC PUMP #2 M 40 HP
AIR COND C.W. CIRC PUMP #3 M 40 HP
S.S. SWBD 15A

ENGINE ROOM & FIRE ROOM AUXILIARY

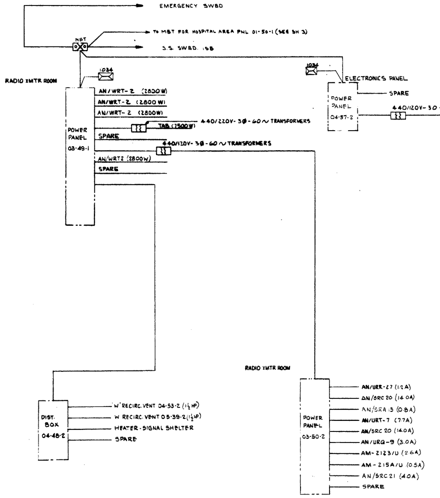
EMERGENCY SWBD
TO MBT FOR HOSPITAL AREA PNL 01-50-1 (SEE SH 3)
MBT
S.S. SWBD. 15B
RADIO XMTR ROOM
1034
POWER PANEL 03-49-1
AN/WRT-2 (2800W)
AN/WRT-2 (2800 W)
AN/WRT-2 (2800W)
440/220V-3Ø-60~ TRANSFORMERS
TAB (7500W)
SPARE
440/120V-3Ø-60~ TRANSFORMERS
AN/WRT2 (2800W)
SPARE
1034
ELECTRONICS PANEL
POWER PANEL 04-37-2
SPARE
440/120V-30
DIST. BOX 04-48-2
W RECIRC. VENT 04-53-2 (1½ HP)
W RECIRC. VENT 05-39-2 (1½ HP)
HEATER - SIGNAL SHELTER
SPARE
RADIO XMTR ROOM
POWER PANEL 03-50-2
AN/URR-27 (1.2A)
AN/SRC 20 (14.0A)
AN/SRA 13 (0.8A)
AN/URT-7 (7.7A)
AN/SRC 20 (14.0A)
AN/URQ-9 (3.0A)
AM-2123/U (2.6A)
AM-215A/U (0.5A)
AN/SRC 21 (4.0A)
SPARE

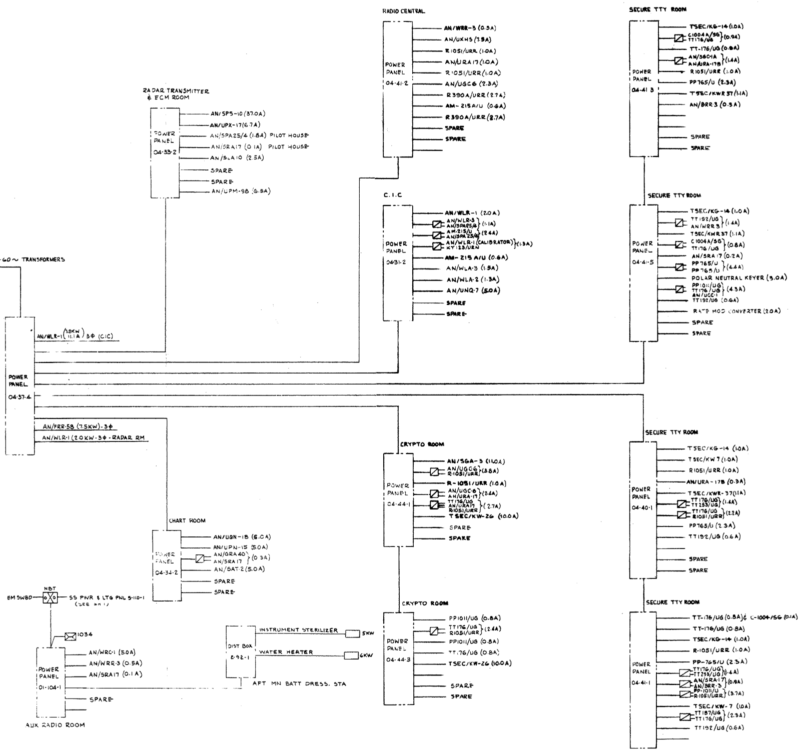
RADAR TRANSMITTER & ECM ROOM
POWER PANEL 04-33-2
AN/SPS-10 (37.0A)
AN/UPX-17 (6.7A)
AN/SPA25/4 (1.8A) PILOT HOUSE
AN/SRA17 (0.1A) PILOT HOUSE
AN/SLA10 (2.5A)
SPARE
SPARE
AN/UPM-98 (6.5A)
RADIO CENTRAL
POWER PANEL 04-41-2
AN/WRR-3 (0.3A)
AN/UKH5 (7.5A)
R1051/URR (1.0A)
AN/URA17 (1.0A)
R1051/URR (1.0A)
AN/UGC6 (2.3A)
R390A/URR (2.7A)
AM-215A/U (0.6A)
R390A/URR (2.7A)
SPARE
SPARE
C.I.C
POWER PANEL 04-31-2
AN/WLR-1 (2.0A)
AN/WLR-3
AN/SPA25/4 (1.1A)
AM-215/U
AN/SPA25/4 (2.4A)
AN/WLR-1 (CALIBRATOR)
KY-123/URN (1.3A)
AM-215 A/U (0.6A)
AN/WLA-3 (1.5A)
AN/WLA-2 (1.3A)
AN/UNQ-7 (5.0A)
SPARE
SPARE
SECURE TTY ROOM
POWER PANEL 04-41-3
TSEC/KG-14 (1.0A)
C1004A/SG
TT176/UG (0.9A)
TT-176/UG (0.8A)
AN/SGC-1A
AN/URA-17B (1.4A)
R1051/URR (1.0A)
PP765/U (2.3A)
TSEC/KWR37 (1.1A)
AN/BRR-3 (0.3A)
SPARE
SPARE
SECURE TTY ROOM
POWER PANEL 04-41-5
TSEC/KG-14 (1.0A)
TT192/UG
AN/WRR3 (1.4A)
TSEC/KWR37 (1.1A)
C1004A/SG
TT176/UG (0.8A)
AN/SRA17 (0.2A)
PP765/U
PP765/U (4.4A)
POLAR NEUTRAL KEYER (3.0A)
PP1011/UG
TT176/UG
AN/UCC-1 (4.3A)
TT192/UG (0.6A)
RATE MOD CONVERTER (2.0A)
SPARE
SPARE
-60~ TRANSFORMERS
POWER PANEL 04-37-4
AN/WLR-1 (7.2KW 11.1A) 3Φ (CIC)
AN/FRR-58 (7.5KW)-3Φ
AN/WLR-1 (2.0KW-3Φ-RADAR RM
CRYPTO ROOM
POWER PANEL 04-44-1
AN/SGA-3 (11.0A)
AN/UGC6
R1051/URR (3.8A)
R-1051/URR (1.0A)
AN/UGC6
AN/URA-17 (2.4A)
TT176/UG
AN/URA17
R1051/URR (2.7A)
TSEC/KW-26 (10.0A)
SPARE
SPARE
CRYPTO ROOM
POWER PANEL 04-44-3
PP1011/UG (0.8A)
TT176/UG
R1051/URR (2.4A)
PP1011/UG (0.8A)
TT176/UG (0.8A)
TSEC/KW-26 (10.0A)
SPARE
SPARE
SECURE TTY ROOM
POWER PANEL 04-40-1
TSEC/KG-14 (1.0A)
TSEC/KW7 (1.0A)
R1051/URR (1.0A)
AN/URA-17B (0.3A)
TSEC/KWR-37 (1.1A)
TT176/UG
TT253/UG (1.4A)
TT176/UG
R1051/URR (2.2A)
PP765/U (2.3A)
TT192/UG (0.6A)
SPARE
SPARE
SECURE TTY ROOM
POWER PANEL 04-41-1
TT-176/UG (0.8A) & C-1004/SG (0.1A)
TT-176/UG (0.8A)
TSEC/KG-14 (1.0A)
R-1051/URR (1.0A)
PP-765/U (2.3A)
TT176/UG
TT253/UG (1.4A)
AN/SRA17
AN/BRR-3 (0.8A)
PP-1011/U
R-1051/URR (3.7A)
TSEC/KW-7 (1.0A)
TT187/UG
TT176/UG (2.3A)
TT192/UG (0.6A)
CHART ROOM
POWER PANEL 04-34-2
AN/UGN-18 (5.0A)
AN/UPN-15 (5.0A)
AN/GRA40
AN/SRA17 (0.3A)
AN/SAT-2 (5.0A)
SPARE
SPARE
NBT
EM SWBD
SS PWR & LTG PNL 5-110-1 (SEE SH 1)
1034
POWER PANEL 01-104-1
AN/WRC-1 (5.0A)
AN/WRR-3 (0.5A)
AN/SRA17 (0.1A)
SPARE
AUX RADIO ROOM
DIST BOX 2-92-1
INSTRUMENT STERILIZER
5KW
WATER HEATER
6KW
AFT MN BATT DRESS. STA

ELECTRONICS

DEPARTMENT OF THE NAVY
WASHINGTON, D. C.
BUREAU OF SHIPS
EXAMINED
SUBMARINE TENDER AS34
POWER DISTRIBUTION SYSTEM
SCHEMATIC WIRING DIAGRAM
APPROVED
FOR CHIEF OF BUREAU
DATE 5/21/63
ELECTRICAL CONTRACT GUIDANCE PLAN

BUREAU OF SHIPS NUMBER			REV.
AS34	800	1564685	
SCALE - NONE		SHEET 2 OF 4	